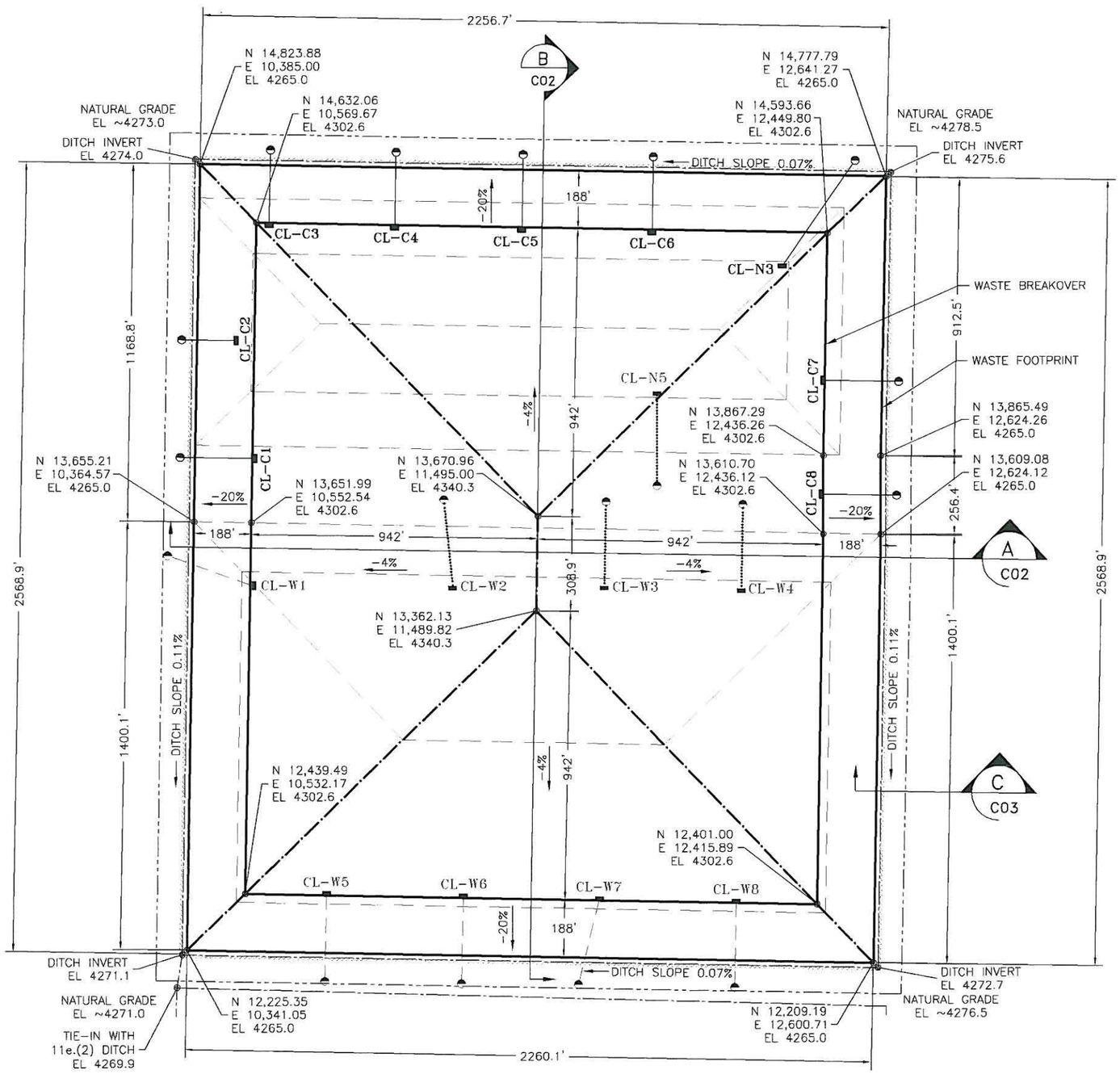

N

LEGEND:

- CAW WASTE LIMITS
- CAW WASTE BREAK LINES
- EDGE OF CLAY LINER (MIN)
- DITCH CENTERLINE
- BUFFER ZONE LIMITS
- CLASS A AND CLASS A NORTH EMBANKMENTS
- CL-XY EXISTING LYSIMITER
- CL-XY PROPOSED LYSIMTER
- CL-XY EXISTING OR CURRENT PLANNED LYSIMETER TO BE ABANDONED

NOTES:

1. ALL ELEVATIONS ARE FOR TOP OF WASTE, UNLESS OTHERWISE NOTED.
2. LYSIMETER CL-W2 HAS NOT BEEN CONSTRUCTED.
3. EMBANKMENT CAPACITY FROM THE TOP OF THE LINER PROTECTIVE COVER (EL 4266') TO THE TOP OF WASTE IS CALCULATED TO BE 8,724,097 CY.

200 0 200 400

LICENSED PROFESSIONAL ENGINEER
No. 189500
DAVID F BOOTH
4/28/11
STATE OF UTAH

DATE	BY	DESCRIPTION OF CHANGE
4/28/11	DFB	FOR LICENSING/CONSTRUCTION

ENERGYSOLUTIONS

ENERGYSOLUTIONS "CLIVE" FACILITY
CLASS A WEST EMBANKMENT
EMBANKMENT FEATURES AND CONTROLS
CLIVE, UTAH

FINAL DRAWING

DRAFTED BY D. BOOTH
REVIEWED BY G. DUTSON
APPROVED BY D. BOOTH
SCALE AS NOTED DATE 04/28/11 REV. 1
DRAWING NO. 10014 C01

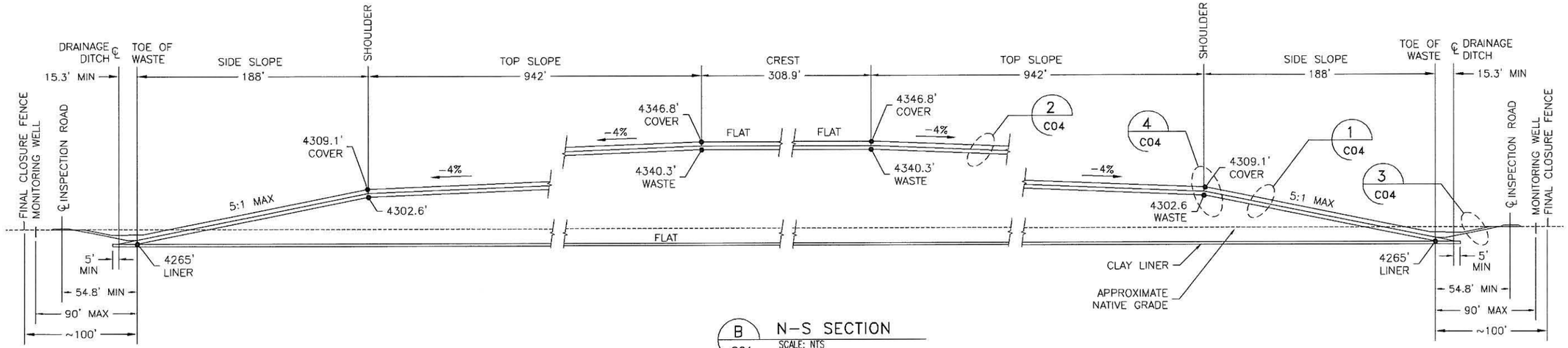

B C01 N-S SECTION
SCALE: NTS

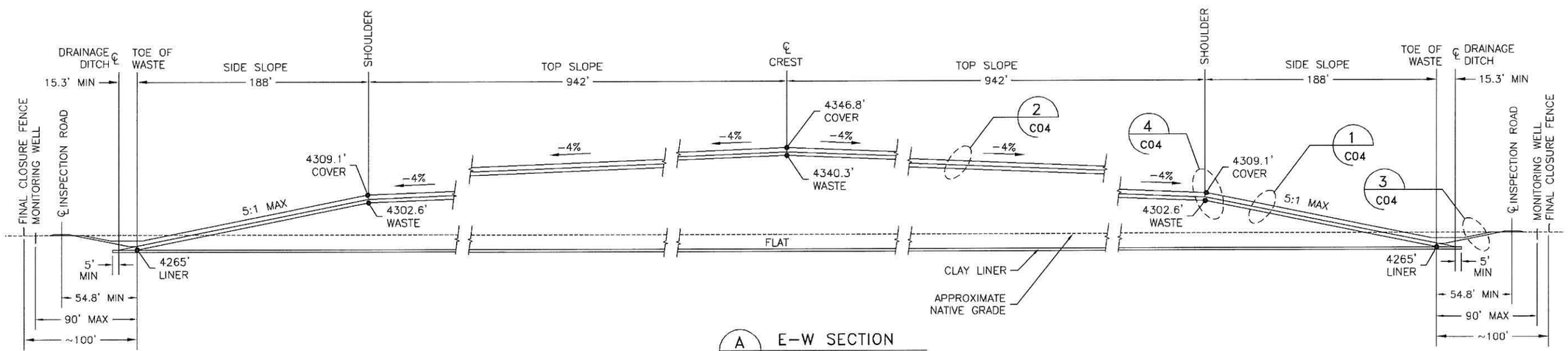

A C01 E-W SECTION
SCALE: NTS

NOTE:
ELEVATIONS SHOWN ARE FOR THE TOP OF LINER, WASTE AND COVER AS INDICATED.

LICENSED PROFESSIONAL ENGINEER
No. 189500
DAVID F BOOTH
4/28/11
STATE OF UTAH

DATE	BY	DESCRIPTION OF CHANGE
4/28/11	DFB	FOR LICENSING/CONSTRUCTION

ENERGYSOLUTIONS

ENERGYSOLUTIONS "CLIVE" FACILITY
CLASS A WEST EMBANKMENT
EMBANKMENT CROSS SECTIONS
CLIVE, UTAH

FINAL DRAWING

DRAFTED BY D. BOOTH
REVIEWED BY G. DUTSON
APPROVED BY D. BOOTH
SCALE AS NOTED
DATE 04/28/11
REV. 1
DRAWING NO. 10014 C02

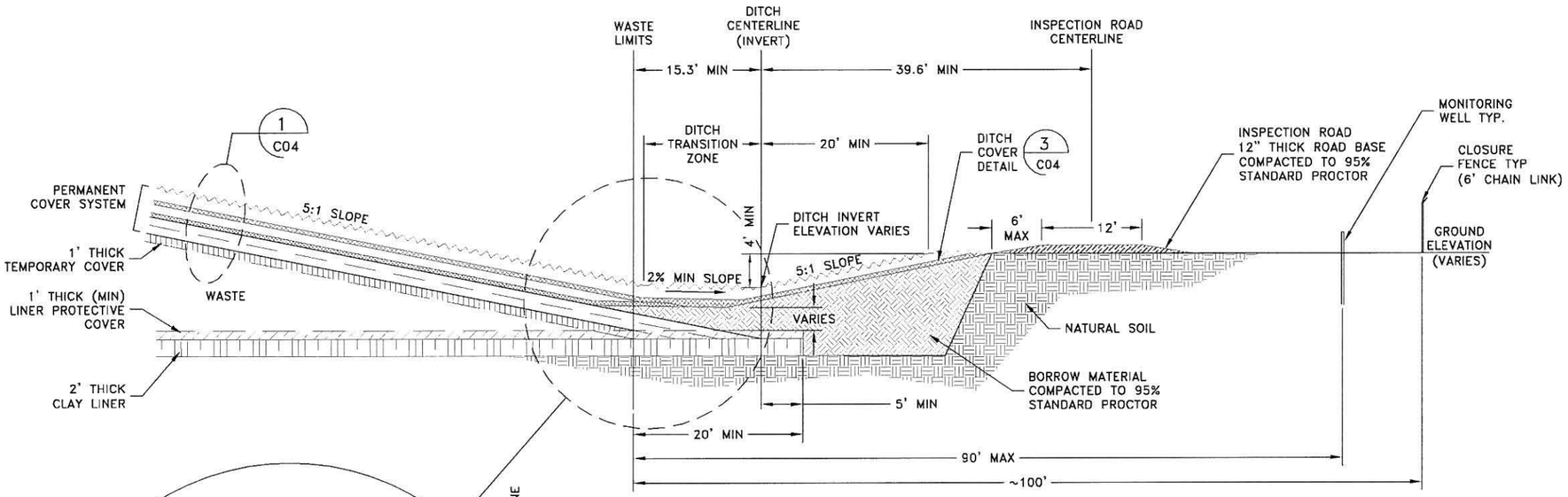

C
C01
DITCH & ROAD DETAIL TYP.
SCALE: 1"=16'-0"

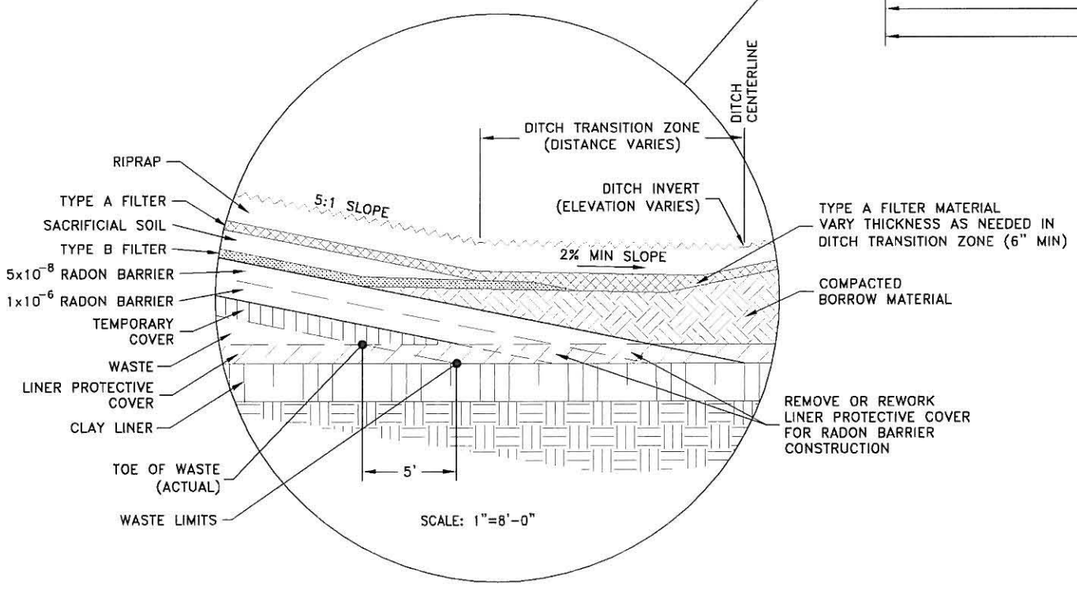

LICENSED PROFESSIONAL ENGINEER
No. 189500
DAVID F BOOTH
4/28/11
STATE OF UTAH

DATE	BY	DESCRIPTION OF CHANGE
4/28/11	DFB	FOR LICENSING

ENERGYSOLUTIONS

ENERGYSOLUTIONS "CLIVE" FACILITY
CLASS A WEST EMBANKMENT
SECTIONS AND DETAILS, 1 OF 2
CLIVE, UTAH

FINAL DRAWING

DRAFTED BY D. BOOTH
REVIEWED BY G. DUTSON
APPROVED BY D. BOOTH
SCALE AS NOTED
DATE 04/28/11
REV
DRAWING NO. 10014 C03

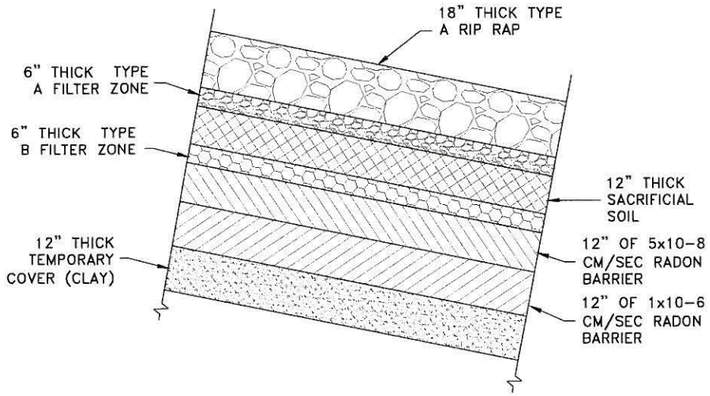

1 DETAIL-SIDE SLOPE
C02 NTS TYPICAL SIDE SLOPE COVER DETAIL

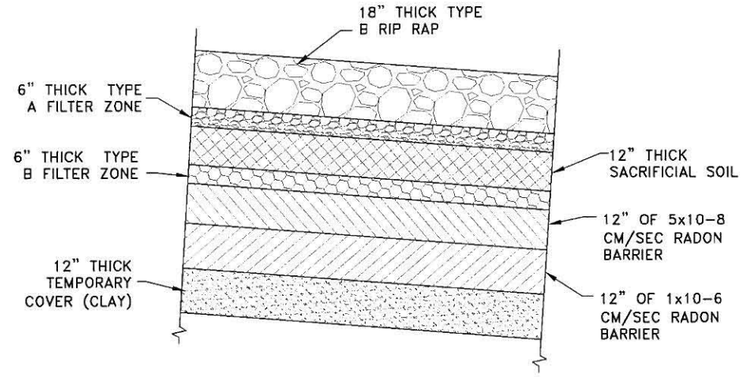

2 DETAIL-TOP SLOPE
C02 NTS TYPICAL TOP SLOPE COVER DETAIL

COVER MATERIAL GRADATIONS (ASTM C-136)

TYPE A RIP RAP
- D_{100}<= 16 INCH
- D_{90} <= 12 INCH
- D_{50} >= 4-1/2 INCH
- D_{10} >= 2 INCH
- D_5 >= NO. 200 SIEVE

TYPE B RIP RAP
- D_{100}<= 4-1/2 INCH
- D_{50} >= 1-1/4 INCH
- D_{10} >= 3/4 INCH
- D_5 >= NO. 200 SIEVE

TYPE A FILTER ZONE
- D_{100}<= 6 INCH
- D_{70} <= 3 INCH
- D_{50} <= 1.57 INCH (40 mm)
- D_{15} <= .85 INCH (22 mm)
- D_{10} >= NO. 10 SIEVE (2mm)
- D_5 >= NO. 200 SIEVE

TYPE B FILTER & SACRIFICIAL SOIL

TYPE B FILTER & SACRIFICAIL SOIL MATERIAL GRADATIONS ARE DETERMINED BY THE FOLLOWING SPECIFICATION:

$\frac{D15\ (MAX)\ FILTER}{D85\ (MIN)\ SOIL}$ MUST BE < 5

$\frac{D50\ (MAX)\ FILTER}{D50\ (MIN)\ SOIL}$ MUST BE <= 25

TYPE B FILTER MIN PERMEABILITY = 3.5 cm/sec

SACRIFICIAL SOIL MIN MOISTURE @ 15 atm = 3.5%

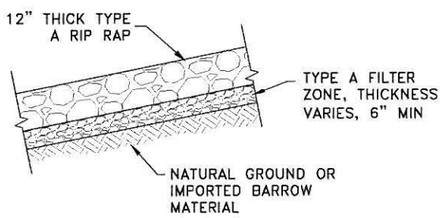

3 DETAIL-DITCH OUTER SLOPE
C02 NTS TYPICAL PERIMETER DITCH COVER DETAIL

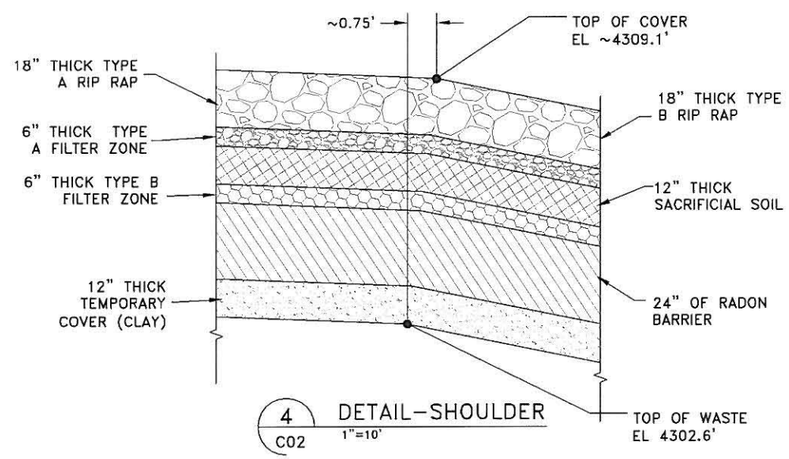

4 DETAIL-SHOULDER
C02 1"=10'

LICENSED PROFESSIONAL ENGINEER
No. 189500
DAVID F BOOTH
4/28/11
STATE OF UTAH

DATE	BY	DESCRIPTION OF CHANGE
4/28/11	DFB	FOR LICENSING

ENERGYSOLUTIONS

ENERGYSOLUTIONS "CLIVE" FACILITY
CLASS A WEST EMBANKMENT
SECTIONS AND DETAILS, 2 OF 2
CLIVE, UTAH

FINAL DRAWING

DRAFTED BY D. BOOTH
REVIEWED BY G. DUTSON
APPROVED BY D. BOOTH
SCALE AS NOTED DATE 04/28/11 REV. 1
DRAWING NO. 10014 C04

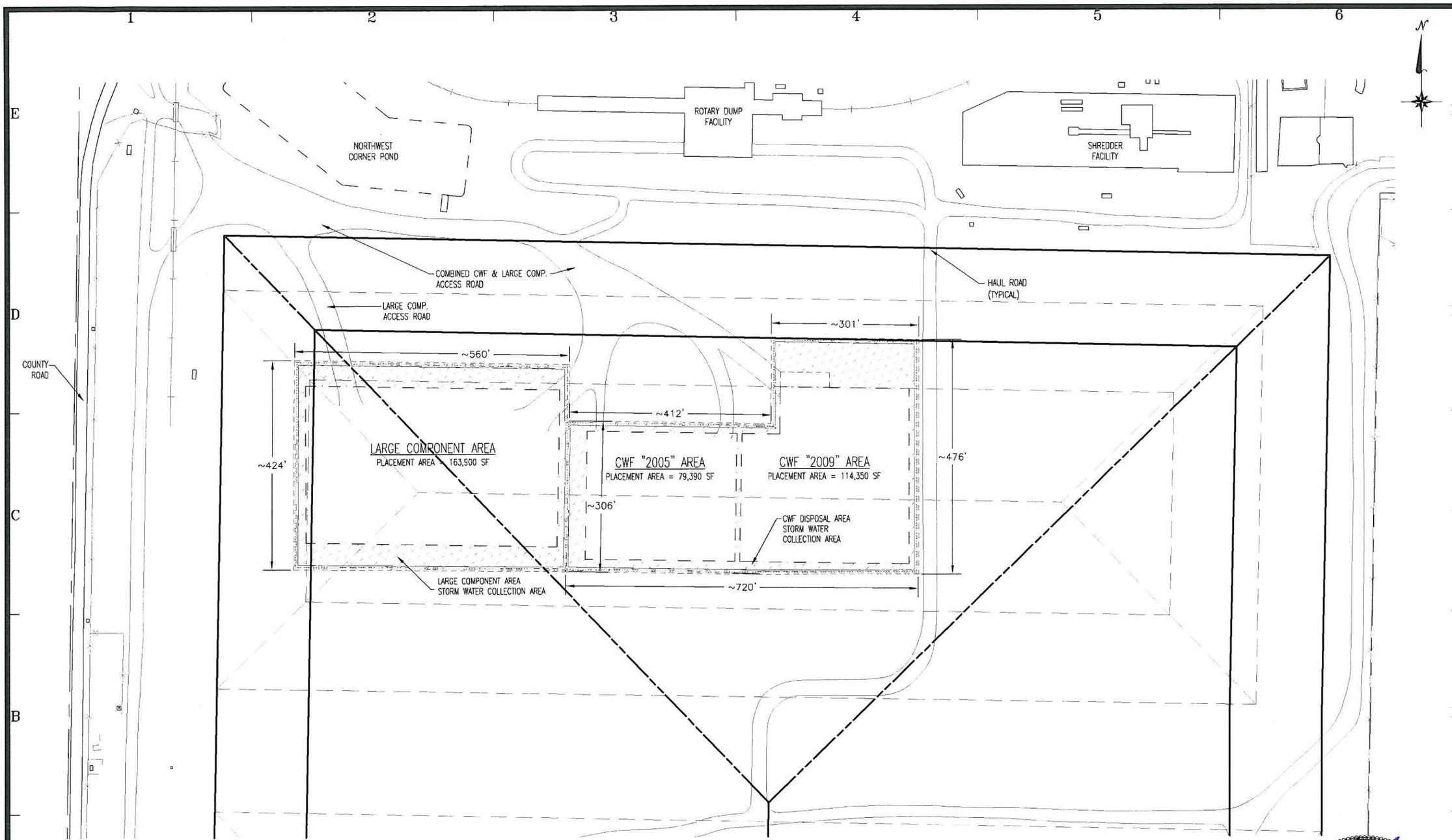

LEGEND:

- CLASS A WEST WASTE LIMITS
- ACTIVE LC & CWF PLACEMENT LIMITS
- CLASS A & CLASS A NORTH WASTE LIMITS & BREAKS
- STORM WATER COLLECTION AREA
- TOP OF RUN-OFF BERM
- TOE OF RUN-OFF BERM

PLAN VIEW-CLASS A WEST EMBANKMENT

100 0 100 200

NOTE:
DRAWING INCORPORATES INFORMATION CONTAINED ON FORMER DRAWING 04080-C04, REV 3.

LICENSED PROFESSIONAL ENGINEER
No. 189500
DAVID F BOOTH
4/28/11
STATE OF UTAH

REV	DATE	BY	DESCRIPTION OF CHANGE
1	4/28/11	DFB	FOR LICENSING/CONSTRUCTION

ENERGYSOLUTIONS

CLASS A WEST EMBANKMENT
ACTIVE CWF & LC AREAS
AREA & HAUL ROAD LAYOUT
CLIVE, UTAH

FINAL DRAWING

DRAFTED BY: D. BOOTH
REVIEWED BY: G. DUTSON
APPROVED BY: D. BOOTH
SCALE: AS NOTED DATE: 04/28/11 REV: 1
DRAWING NO. 10014 C05

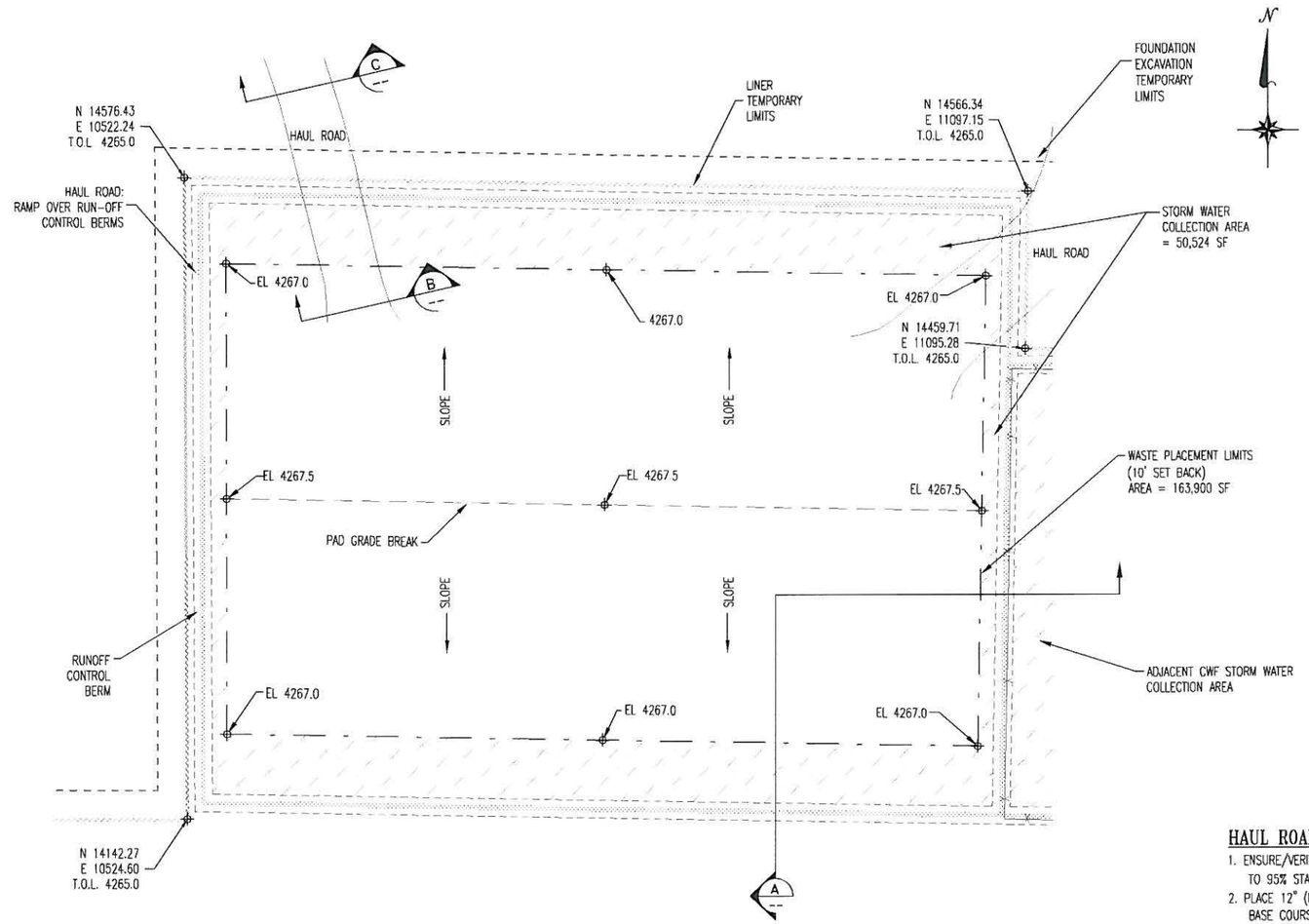

LARGE COMPONENT AREA PLAN VIEW

SCALE 1" = 50'

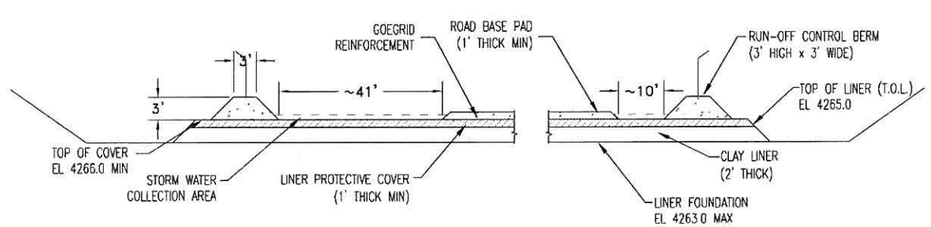

A TYPICAL PAD X-SECTION

NOT TO SCALE

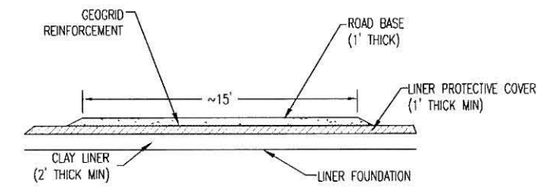

B TYPICAL ROAD X-SECTION ON LINER

NOT TO SCALE

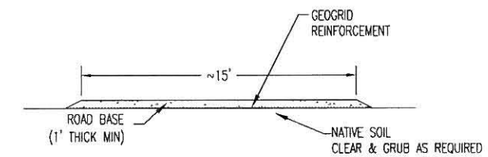

C TYPICAL ROAD X-SECTION ON NATIVE SOIL

NOT TO SCALE

HAUL ROAD NOTES:

1. ENSURE/VERIFY SOIL PROTECTIVE OVER COMPACTED TO 95% STANDARD PROCTOR (ASTM D-698)
2. PLACE 12" (MAX 8" LIFTS) UDOT SPEC 02721 BASE COURSE CONFORMING TO THE FOLLOWING GRADATION, OR ALTERNATIVE APPROVED BY EC DIRECTOR OF ENGINEERING.

SIEVE SIZE	PERCENT FINER
25 mm (1")	100
12.5 mm (1/2")	79-91
4.75 mm (#4)	49-61
1.18 mm (#16)	27-35
.075 mm (#200)	7-11

3. COMPACT BASE COURSE TO 95% STANDARD PROCTOR (ASTM D-698)

STORM WATER CALCULATIONS:

METHOD USED: RATIONAL, V=CIA WHERE,
V = VOLUME OF RUNOFF
C = RUNOFF COEFFICIENT, 0.95 (IMPERVIOUS SURFACE)
i = DESIGN STORM EVENT, 25 YR-24 HOUR, 2.5 IN. (0.208")
A = AREA OF RUNOFF COLLECTION, 222,935 SF

V = 0.95 x 0.208 x 222,935 = 44,052 CF

AREA OF EVAPORATION BASIN = 50,524 SF
DEPTH OF COLLECTED RUNOFF = 44,052 CF/50,524 SF = 0.87 FT

CONCLUSION: 1 FT DEPTH OF EVAPORATION BASIN IS ADEQUATE TO STORE RUNOFF FROM A 25 YR-24 HR STORM EVENT.

NOTES:

1. COORINATES ARE IN THE CLIVE SITE SYSTEM WITH N10,000, E10,000 AT THE SW CORNER OF SECTION 32.
2. DRAWING INCORPORATES INFORMATION CONTAINED ON FORMER DRAWING 04080-C05, REV 3.

LICENSED PROFESSIONAL ENGINEER
No. 189500
DAVID F BOOTH
4/28/11
STATE OF UTAH

DATE	BY	DESCRIPTION OF CHANGE
4/28/11	DFB	FOR LICENSING/CONSTRUCTION

ENERGYSOLUTIONS
CLASS A WEST EMBANKMENT
ACTIVE LARGE COMPONENT AREA
LARGE COMPONENT AREA PLAN & DETAILS
CLIVE, UTAH

FINAL DRAWING

DRAFTED BY: D. BOOTH
REVIEWED BY: G. DUTSON
APPROVED BY: D. BOOTH
SCALE: AS NOTED | DATE: 04/28/11 | REV: 1
DRAWING NO.: 10014 C06

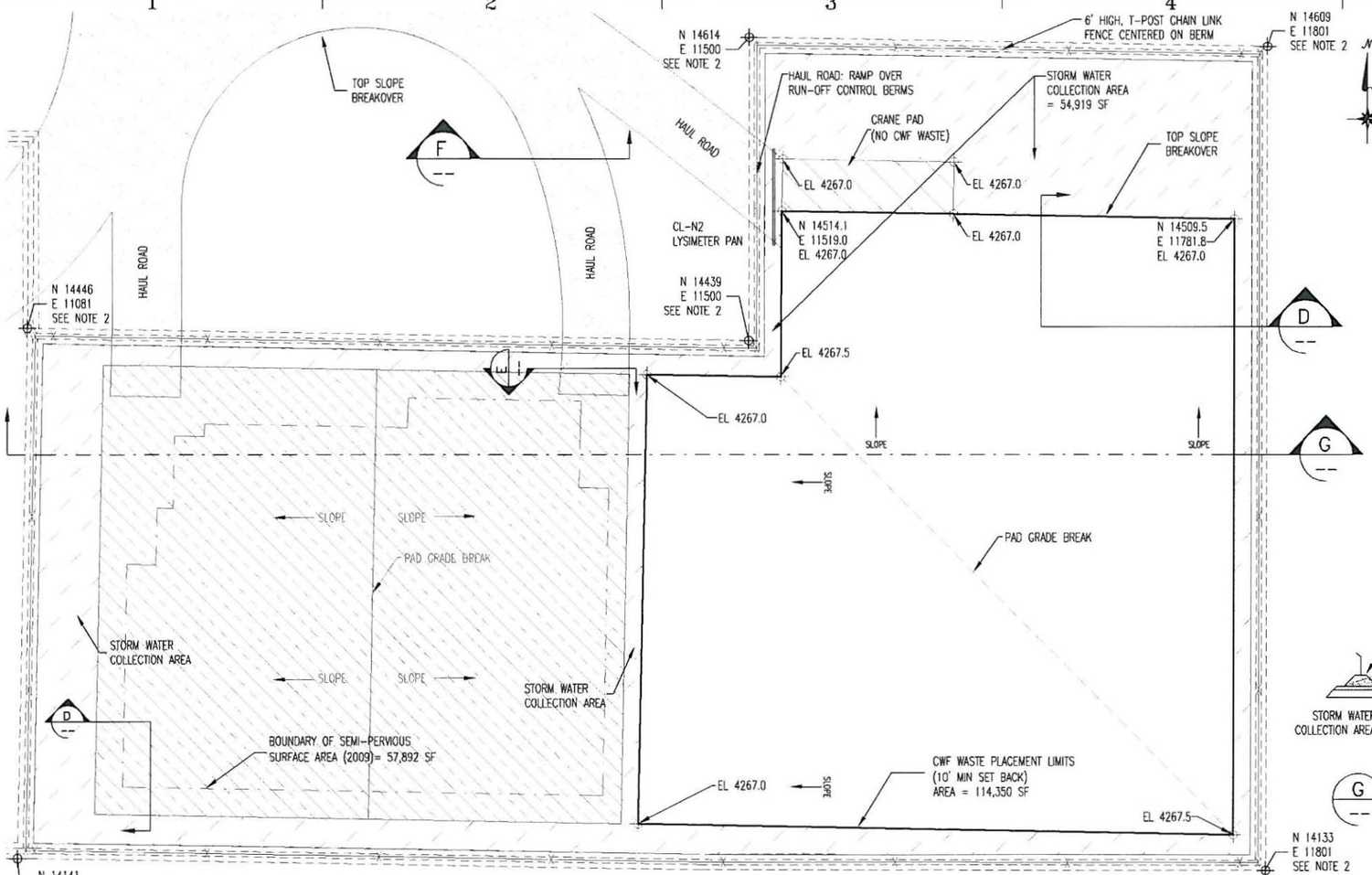

CWF AREA PLAN VIEW

SCALE 1" = 40'

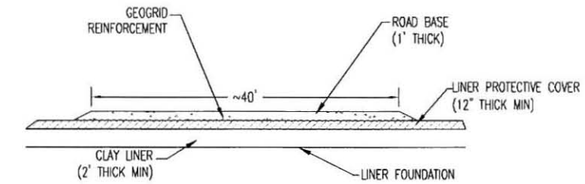

E TYPICAL ROAD X-SECTION ON LINER

NOT TO SCALE

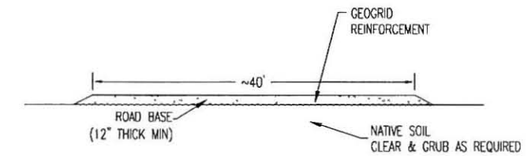

F TYPICAL ROAD X-SECTION ON NATIVE SOIL

NOT TO SCALE

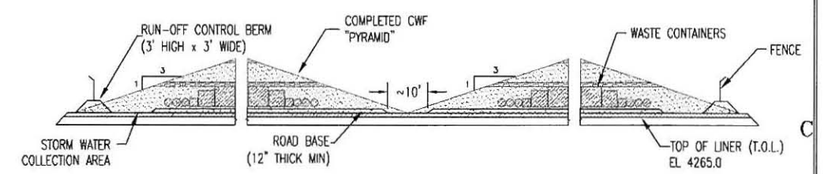

G TYPICAL TRANSITION BETWEEN PADS X-SECTION

NOT TO SCALE

NOTES:

1. COORDINATES ARE IN THE LOCAL GRID SYSTEM (CLIVE) WITH N10,000, E10,000 LOCATED AT THE SW CORNER MONUMENT OF SECTION 32.
2. COORDINATES SHOWN ARE THE APPROXIMATE LIMITS OF THE COMPLETED CWF "PYRAMIDS". ACTUAL LOCATIONS MAY VARY, BUT ALL CWF WASTE MUST BE PLACED UNDERNEATH THE TOP SLOPE IN THE PLACEMENT AREAS.
3. DRAWING INCORPORATES INFORMATION FROM FORMER DRAWINGS 04080-C06, REV 4 & 04080-C06A, REV 1.

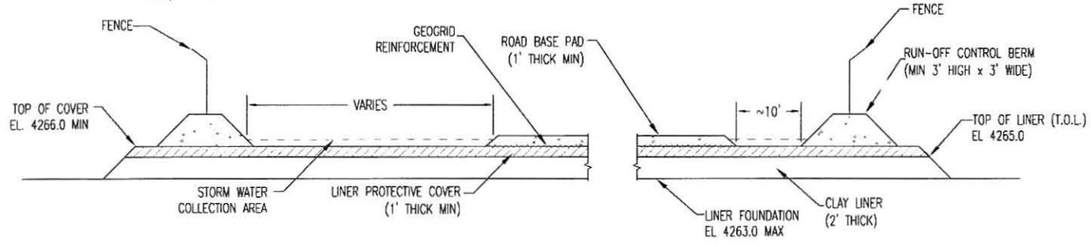

D TYPICAL PAD X-SECTION

NOT TO SCALE

STORM WATER CALCULATIONS:

METHOD USED: RATIONAL, $V_{IMP}=C_{IMP}iA_{IMP}$, $V_{SP}=C_{SP}iA_{SP}$, WHERE,
V_{IMP} = VOLUME OF RUNOFF FROM IMPERVIOUS SURFACE
V_{SP} = VOLUME OF RUNOFF FROM SEMI-PERVIOUS SURFACE
C_{IMP} = RUNOFF COEFFICIENT, 0.95 (IMPERVIOUS SURFACE)
C_{SP} = RUNOFF COEFFICIENT, 0.80 (SEMI-PERVIOUS SURFACE)
i = DESIGN STORM EVENT, 25 YR-24 HOUR, 2.5 IN. (0.208')
A_{IMP} = AREA OF RUNOFF COLLECTION (IMPERVIOUS SURFACE), 199,673 SF
A_{SP} = AREA OF RUNOFF COLLECTION (SEMI-PERVIOUS SURFACE), 57,892 SF

IMPERVIOUS SURFACE VOLUME CALCULATION:
V_{OL} = 0.95 x 0.208 x 199,673 = 39,455 CF

SEMI-PERVIOUS SURFACE VOLUME CALCULATION:
V_{OL} = 0.80 x 0.208 x 57,892 = 9,633 CF

AREA OF EVAPORATION BASIN = 54,919 SF
DEPTH OF COLLECTED RUNOFF = (39,455+9,633) CF/54,919 SF = 0.89 FT

CONCLUSION: 1 FT DEPTH OF EVAPORATION BASIN IS ADEQUATE TO STORE RUNOFF FROM A 25 YR-24 HR STORM EVENT

HAUL ROAD NOTES:

1. ENSURE/VERIFY SOIL PROTECTIVE COVER COMPACTION TO BE 95% STANDARD PROCTOR (ASTM D-698)
2. PLACE 12" (MAX 8" LIFTS) UDOT SPEC 02721 BASE COURSE CONFORMING TO THE FOLLOWING GRADATION, OR ALTERNATIVE APPROVED BY ES DIRECTOR OF ENGINEERING.

SIEVE SIZE	PERCENT FINER
25.0 mm (1")	100
12.5 mm (1/2")	79-91
4.75 mm (#4)	49-61
1.18 mm (#16)	27-35
.075 mm (#200)	7-11

3. COMPACT BASE COURSE TO 95% STANDARD PROCTOR (ASTM D-698)

LICENSED PROFESSIONAL ENGINEER
No. 189500
DAVID F BOOTH
4/28/11
STATE OF UTAH

DATE	BY	DESCRIPTION OF CHANGE
4/28/11	DFB	FOR LICENSING/CONSTRUCTION

ENERGYSOLUTIONS
CLASS A WEST EMBANKMENT
ACTIVE CWF AREA
CWF AREA PLAN & DETAILS
CLIVE, UTAH

FINAL DRAWING

DRAFTED BY D. BOOTH
DESIGNED BY G. DUTSON
APPROVED BY D. BOOTH
SCALE AS NOTED DATE 04/28/11 REV. 1
DRAWING NO. 10014 C07

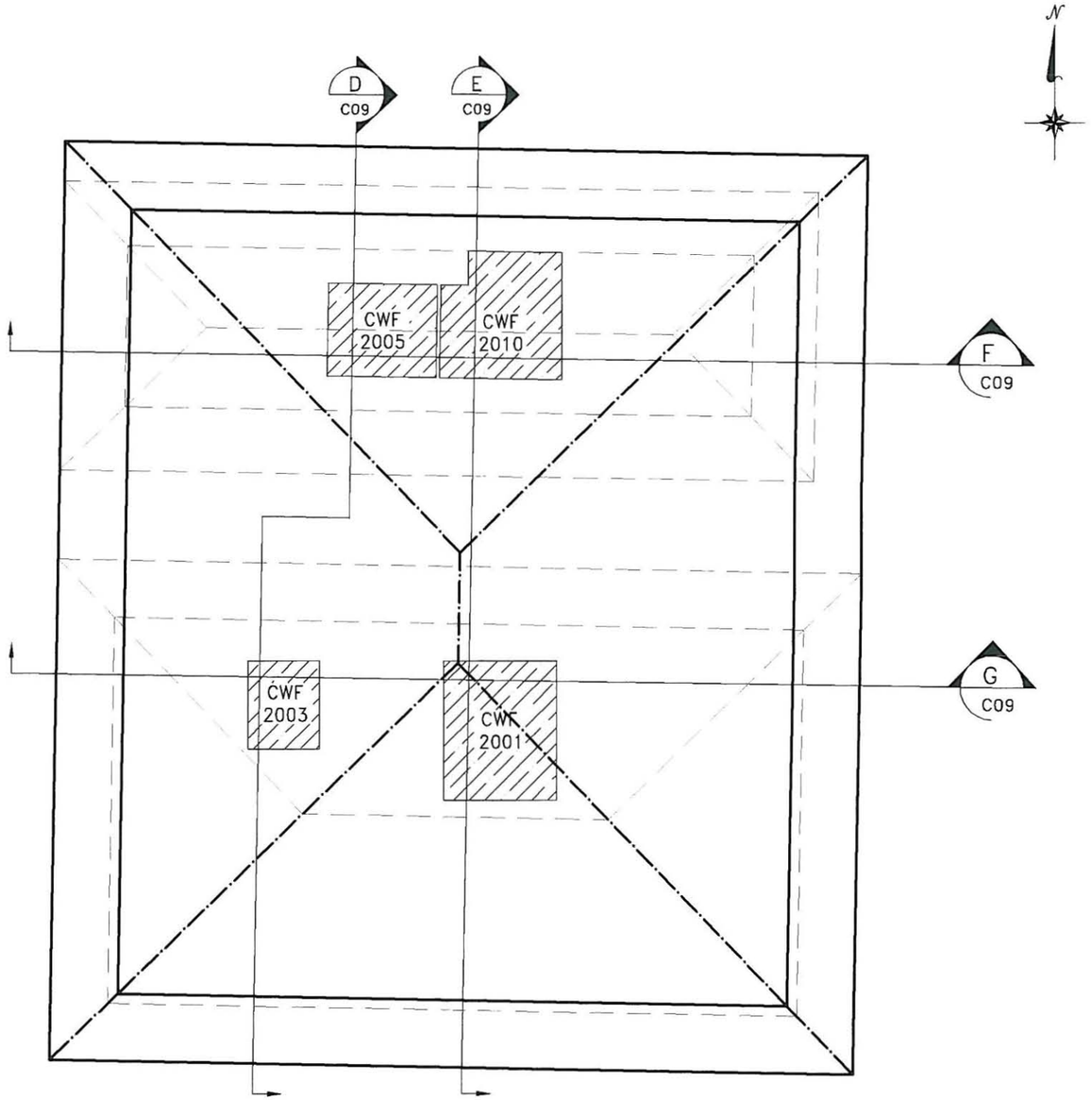

PLAN VIEW – CLASS A WEST EMBANKMENT

200 0 200 400

LEGEND:

- CLASS A & CLASS A NORTH EMBANKMENTS
- WASTE LIMITS: CLASS A WEST
- BREAKLINES: CLASS A WEST
- CWF DISPOSAL AREAS

LICENSED PROFESSIONAL ENGINEER
No. 189500
DAVID F BOOTH
4/28/11
STATE OF UTAH

REV.	DATE	BY	DESCRIPTION OF CHANGE
1	4/28/11	DFB	FOR LICENSING/CONSTRUCTION

ENERGYSOLUTIONS

ENERGYSOLUTIONS "CLIVE" FACILITY
CLASS A WEST EMBANKMENT
CLASS A, CLASS A NORTH & CLASS A WEST MAP
CLIVE, UTAH

FINAL DRAWING

DRAFTED BY: D. BOOTH
REVIEWED BY: G. DUTSON
APPROVED BY: D. BOOTH
SCALE: AS NOTED
DATE: 04/28/11
REV. 1
DRAWING NO. 10014 C08

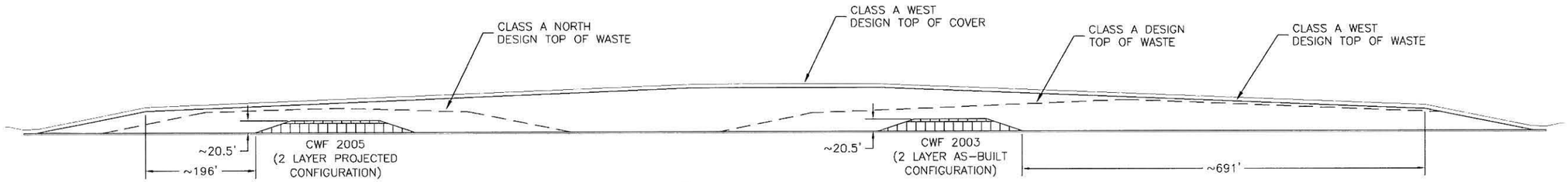

D C08 SECTION
SCALE: AS SHOWN

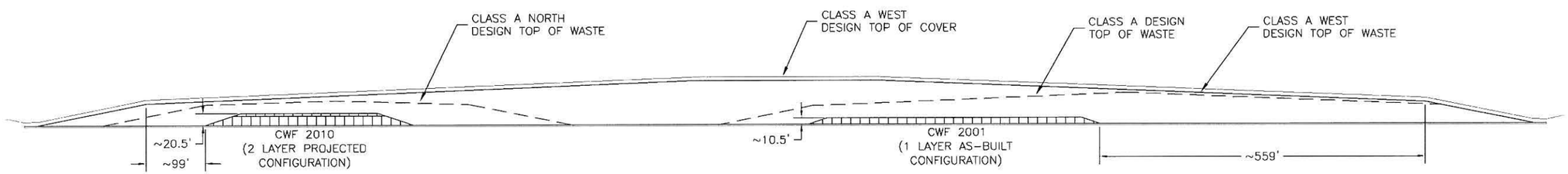

E C08 SECTION
SCALE: AS SHOWN

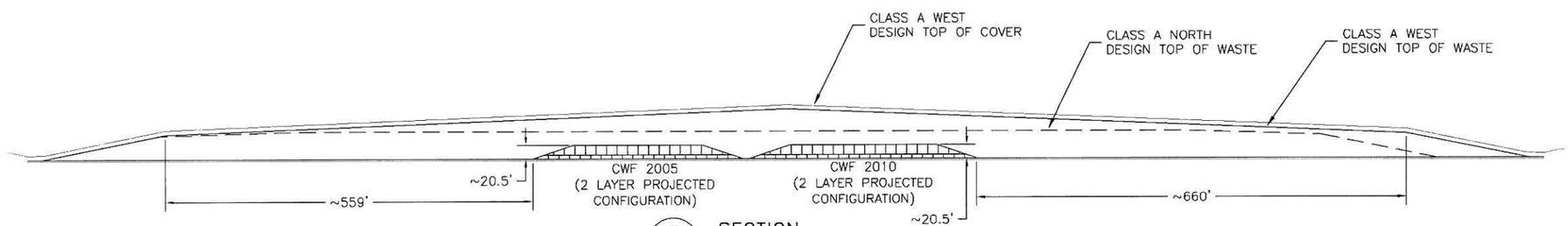

F C08 SECTION
SCALE: AS SHOWN

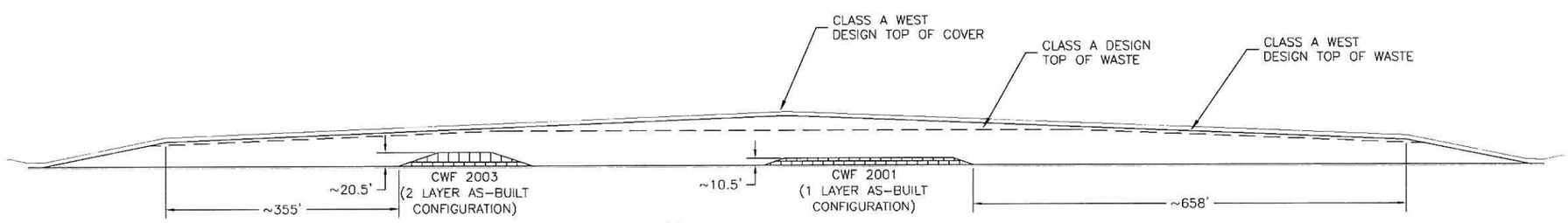

G C08 SECTION
SCALE: AS SHOWN

100 0 100 200

LICENSED PROFESSIONAL ENGINEER
No. 189500
DAVID F BOOTH
4/28/11
STATE OF UTAH

REV	DATE	BY	DESCRIPTION OF CHANGE
1	4/28/11	DFB	FOR LICENSING/CONSTRUCTION

ENERGYSOLUTIONS

ENERGYSOLUTIONS "CLIVE" FACILITY
CLASS A WEST EMBANKMENT
CWF CROSS SECTIONS
CLIVE, UTAH

FINAL DRAWING

DRAFTED BY D. BOOTH
REVIEWED BY G. DUTSON
APPROVED BY D. BOOTH
SCALE AS NOTED DATE 04/28/11 REV. 1
DRAWING NO. 10014 C09

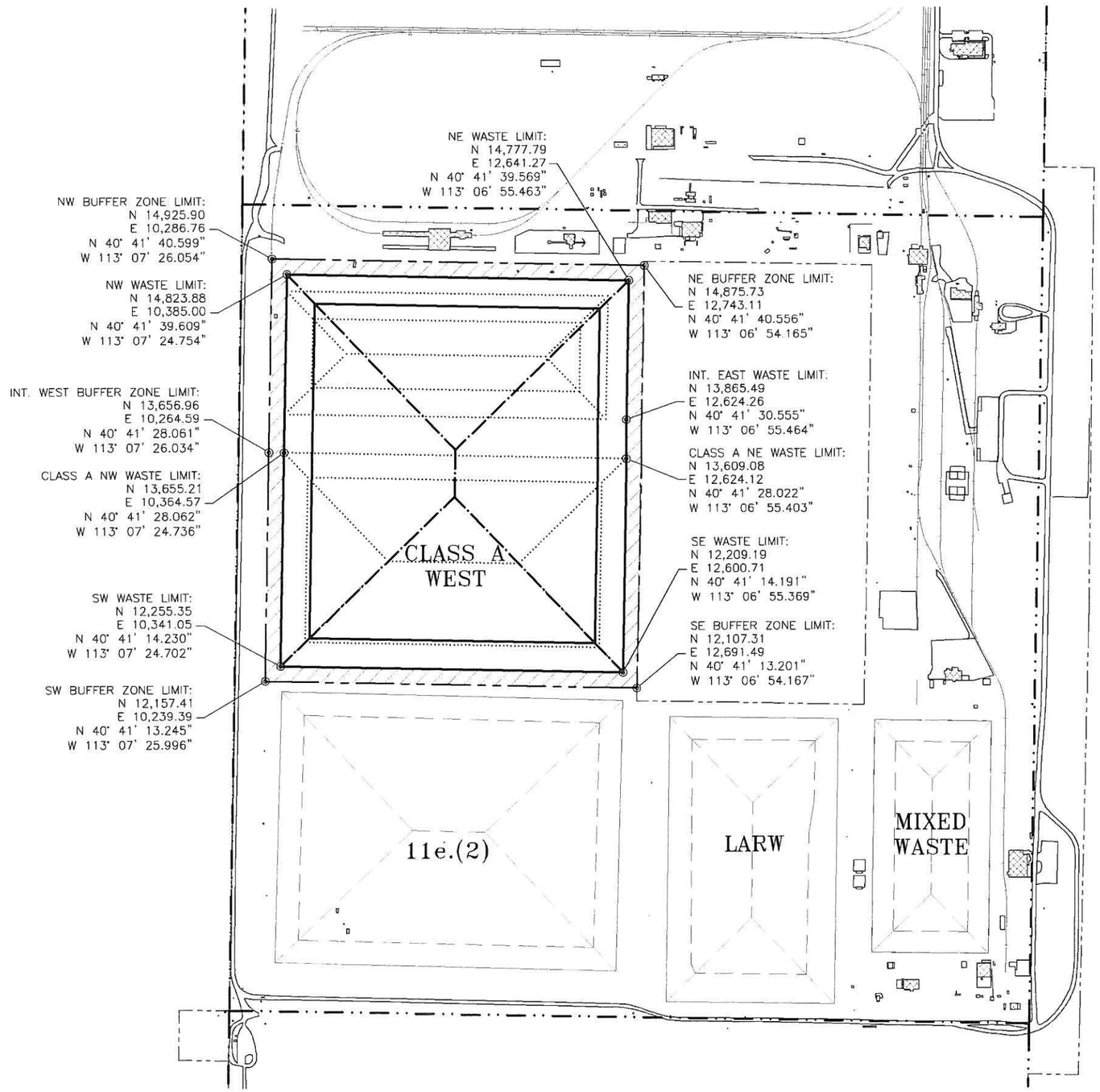

LEGEND:

- CAW WASTE LIMITS
- CAW WASTE BREAK LINES
- CAW BUFFER ZONE LIMITS
- SECTION BOUNDARIES
- PROPERTY BOUNDARIES
- CLASS A & CLASS A NORTH
- CAW BUFFER ZONE

NOTES:
COORDINATES ARE LISTED BOTH IN THE LOCAL "CLIVE" SYSTEM AND AS LATITUDE AND LONGITUDE.

400 0 400 800

LICENSED PROFESSIONAL ENGINEER
No. 189500
DAVID F BOOTH
4/28/11
STATE OF UTAH

DATE	BY	DESCRIPTION OF CHANGE
4/28/11	DFB	FOR LICENSING/CONSTRUCTION

ENERGYSOLUTIONS

ENERGYSOLUTIONS "CLIVE" FACILITY
CLASS A WEST EMBANKMENT
EMBANKMENT LOCATION MAP & BUFFER ZONE
CLIVE, UTAH

FINAL DRAWING

DRAFTED BY D. BOOTH
REVIEWED BY G. DUTSON
APPROVED BY D. BOOTH
SCALE AS NOTED DATE 04/28/11 REV. 1
DRAWING NO. 10014 U01

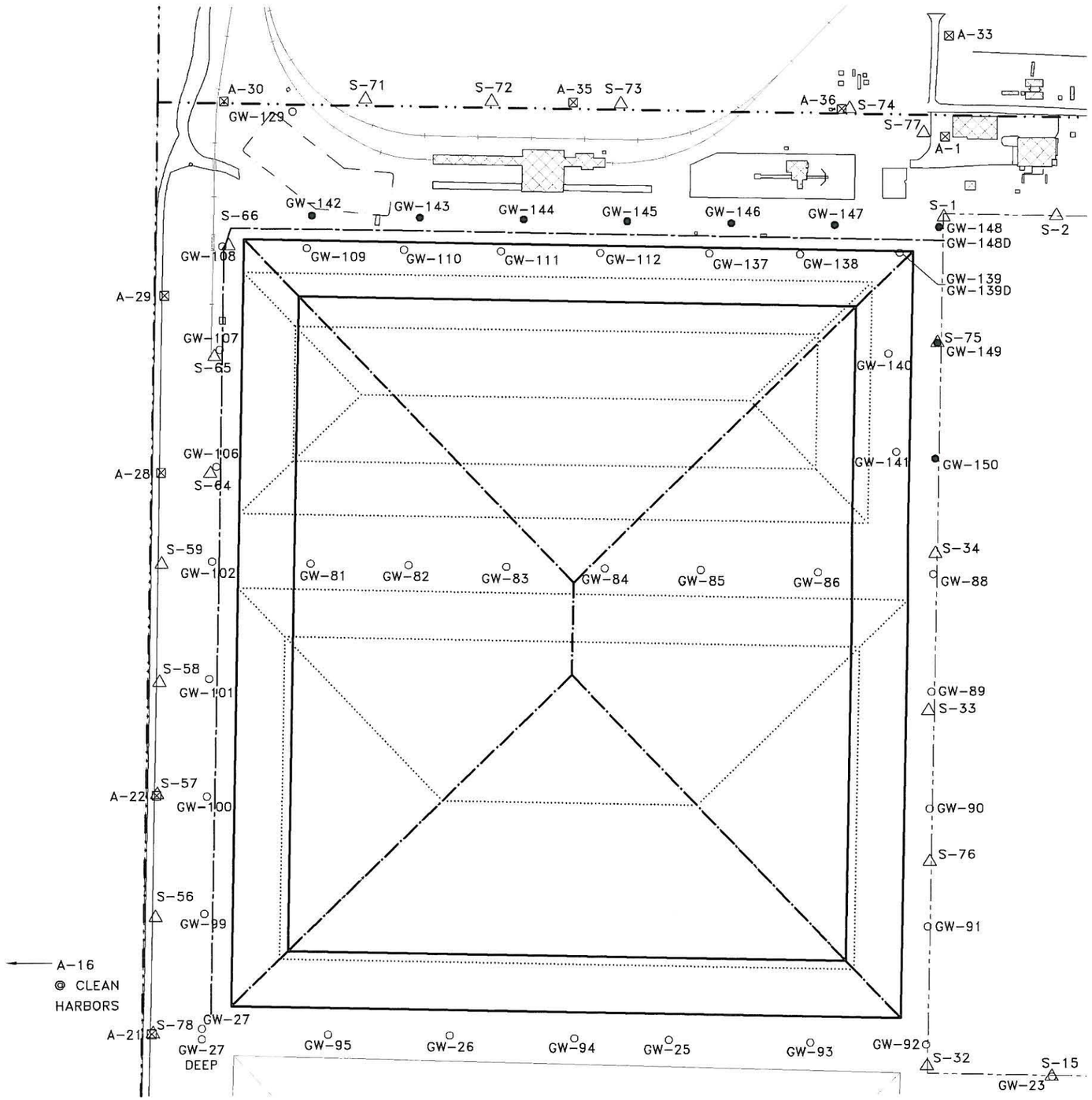

LEGEND:

- CAW WASTE LIMITS
- CAW WASTE BREAK LINES
- RUN-ON BERM CENTERLINE
- SECTION BOUNDARIES
- PROPERTY BOUNDARIES
- CLASS A & CLASS A NORTH
- A-XX ⊠ EXIST. AIRSAMPLING STATION
- S-YY △ EXIST. SOIL SAMPLING STATION
- GW-ZZ ○ EXIST. GROUNDWATER MONITORING WELL
- A-XX ■ NEW AIR SAMPLING STATION
- S-YY ▲ NEW SOIL SAMPLING STATION
- GW-ZZ ● NEW GROUNDWATER MONITORING WELL

200 0 200 400

ENVIRONMENTAL MONITORING STATIONS TO BE ABANDONED OR RELOCATED	
SOIL STATIONS	
S-66	
GROUNDWATER MONITORING WELLS	
GW-81	GW-111
GW-82	GW-112
GW-83	GW-137
GW-84	GW-138
GW-85	GW-139
GW-86	GW-139D
GW-109	GW-140
GW-110	GW-141

LICENSED PROFESSIONAL ENGINEER
No. 189500
DAVID F BOOTH
4/28/11
STATE OF UTAH

DATE	BY	DESCRIPTION OF CHANGE
4/28/11	DFB	FOR LICENSING/CONSTRUCTION

ENERGYSOLUTIONS

ENERGYSOLUTIONS "CLIVE" FACILITY
CLASS A WEST EMBANKMENT
EMBANKMENT ENVIRONMENTAL MONITORING
CLIVE, UTAH

FINAL DRAWING

DRAFTED BY D. BOOTH
REVIEWED BY G. DUTSON
APPROVED BY D. BOOTH
SCALE AS NOTED DATE 04/28/11 REV. 1
DRAWING NO. 10014 U02